RO

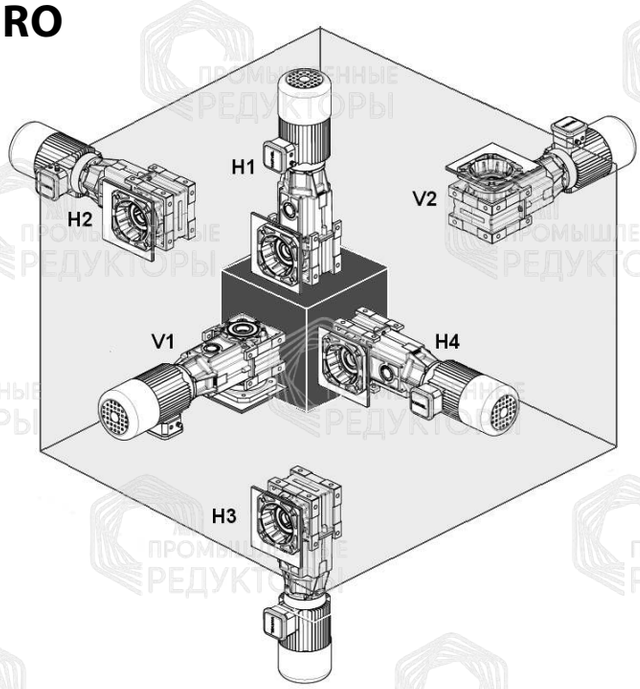
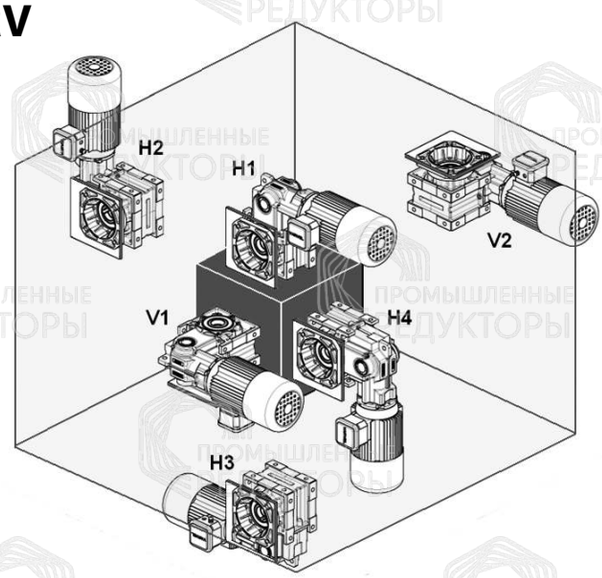
RV